HARMONIA
LIVING

Arden Left Arm Section HL-ARD-CH-LAS

Product Images

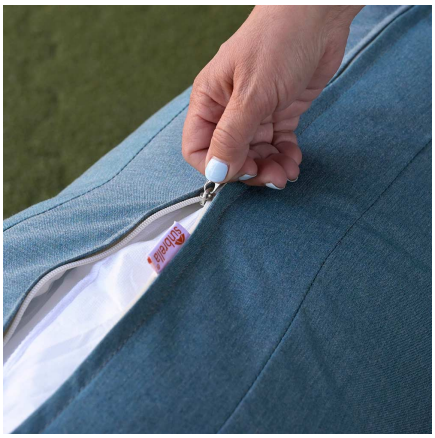

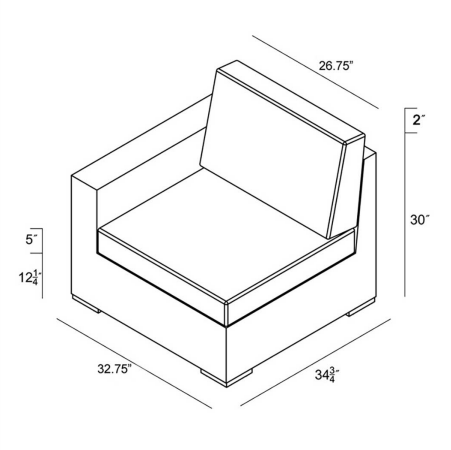

Description

The Arden Left Arm Facing Section brings a cozy, rustic appeal to modern outdoor dining furniture. This collection's modern style, beautiful wicker and extra-plush cushions give it a unique visual appeal, while sturdy, all-weather construction ensures lasting performance across the seasons. The wicker is made with durable High-Density Polyethylene (HDPE) and finished in a beautifully textured Chesnut color, which gives it a natural feel. Its sturdy aluminum frame, triple reinforced seat and fade resistant cushions are made to endure in any outdoor setting, rain or shine. This chair is designed to be used with the other coordinating Arden Sectional seating pieces. If you wish to order this piece through Harmonia Living's Quick Ship program, make sure to select a Quick Ship (QS) fabric before checkout! All cushions are made in the USA from Sunbrella, Outdura, and Revolution performance fabrics which carry a 5 year fade warranty.

Includes

- 1x Arden Left Arm Section (HL-ARD-CH-LAS)

Dimensions

- Arden Left Arm Section: 32.75"L x 34.75"W x 32"H (33 lbs.)
- Frame Height: 30.25"
- Seat Height (No Cushion): 12.25"
- Seat Height (With Cushion): 17.25"
- Back Height: 14.75"
- Arm Height: 25"

Features

- Wicker is hand-woven onto a thick gauge, powder coated aluminum frame that is lightweight, durable and corrosion resistant.
- Each seat is triple reinforced for lasting durability.
- Decorative teak wood feet. Each seat is triple reinforced for lasting durability.
- Plastic foot glides help to protect your patio from scratching and also to help keep the furniture protected from dirt or water that can accumulate on the patio.
- Cushions are made in America using American materials including Sunbrella, Outdura and Revolution performance fabrics which are easy to clean, are fade, stain, mildew resistant and carry a 5 year warranty.
- Machine washable cushion covers feature durable and frustration free YKK brand zippers for easy

removal. Top and bottoms of our seat cushions are identical so they can be flipped if a stain gets on the cushion between machine washes.

- All cushions are sewn with PremoBond brand marine-grade UV treated thread made from high-quality mold, mildew, and rot resistant bonded polyester to ensure your cushions won't fall apart at the seams.
- Each seam is finished with overlock stitching for additional durability, reinforcement, weather proofing and to prevent the fraying of internal fabric edges during machine washing.
- American made CertiPUR-US® certified foam cushion inserts which are produced without harmful chemicals such as formaldehyde, ozone depleters, PBDEs, TDCPP or TCEP flame retardants and are free of mercury, lead, and other heavy metals to protect the planet as well as the health of you and your loved ones.
- Thick 4.5" foam seat cushion inserts plus additional layers of 1" of quick-drying Dacron on the top and bottom to help wick away moisture. This combination of layers creates the "Goldilocks" of cushions, firm enough to avoid bottoming out but soft enough for comfort.
- Back cushions are filled with 100% polyester fill fibers for a cloud-like back rest. The insert is sewn shut in a mesh encasing to keep the filling clean and easy to unstuff.
- Cushion ties are sewn to the back of each seat cushion to secure them in place to the frame.